DocuSign Envelope ID: 5D927B1F-C87C-4F58-80B3-9E2D2C6D14C5

| PROJECT REFERENCE NO. | SHEET NO. |
|---|---|
| 14SP.2088I.1 | 2A-1 |
| R/W SHEET NO. | |
| ROADWAY DESIGN ENGINEER | PAVEMENT ENGINEER |

NORTH CAROLINA PROFESSIONAL SEAL 15435 ENGINEER JOHN C. LANSFORD 10/26/2021
DocuSigned by: John C. Lansford

NORTH CAROLINA PROFESSIONAL SEAL 36350 ENGINEER REECE M. SCHULTZ 10/26/2021
DocuSigned by: Reece M. Schultz

DOCUMENT NOT CONSIDERED FINAL UNLESS ALL SIGNATURES COMPLETED

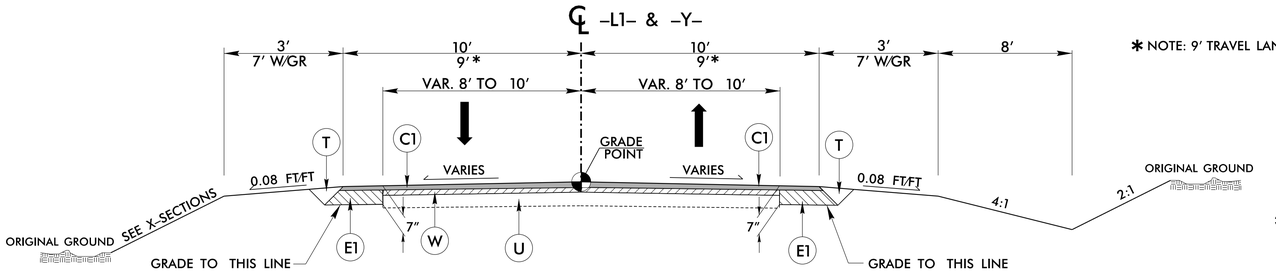


TYPICAL SECTION NO. 1

✱ NOTE: 9′ TRAVEL LANES FOR –Y–

## USE TYPICAL SECTION NO. 1

–L1– STA. 11+30.00 TO –L1– STA. 11+50.00
–L1– STA. 16+90.00 TO –L1– STA. 17+28.66
✱ –Y– STA. 10+25.00 TO –Y– STA. 11+99.49

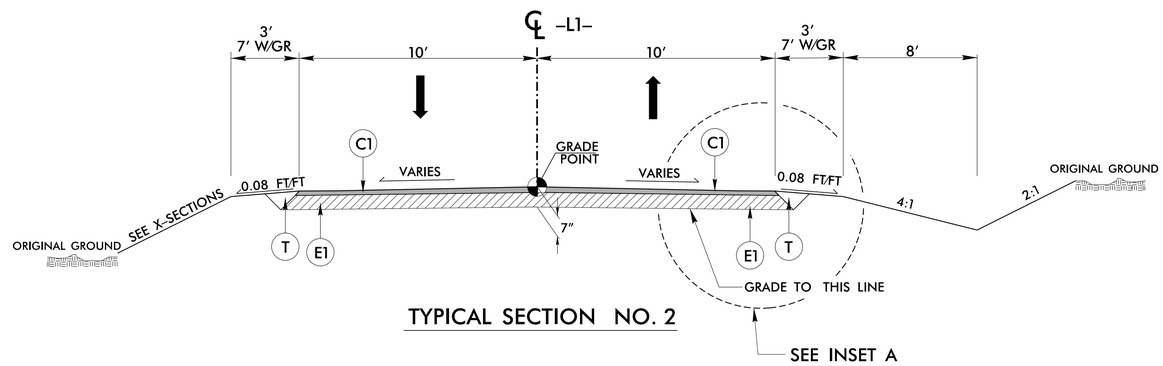


TYPICAL SECTION NO. 2

## USE TYPICAL SECTION NO. 2

–L1– STA. 11+50.00 TO –L1– STA. 15+23.75 (BEGIN BRIDGE)
–L1– STA. 16+66.25 (END BRIDGE) TO –L1– STA. 16+90.00

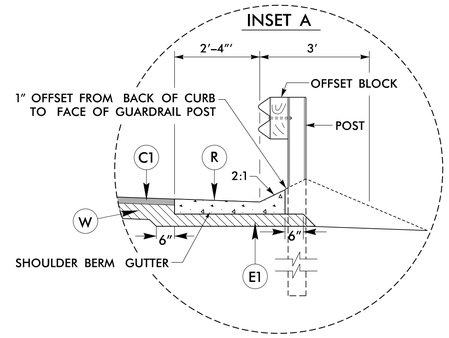


## USE INSET A

FROM –L– STA. 15+06 TO BEGIN BRIDGE LT. AND RT.
FROM –L1– STA. 16+66.25 (END BRIDGE) TO –L1– STA. 16+93.17 LT.
FROM –L1– STA. 16+66.25 (END BRIDGE) TO –L1– STA. 16+92.85 RT.

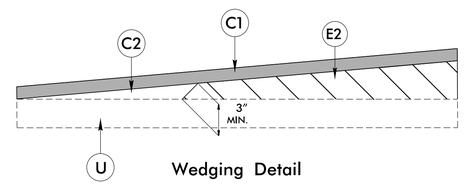


Wedging Detail

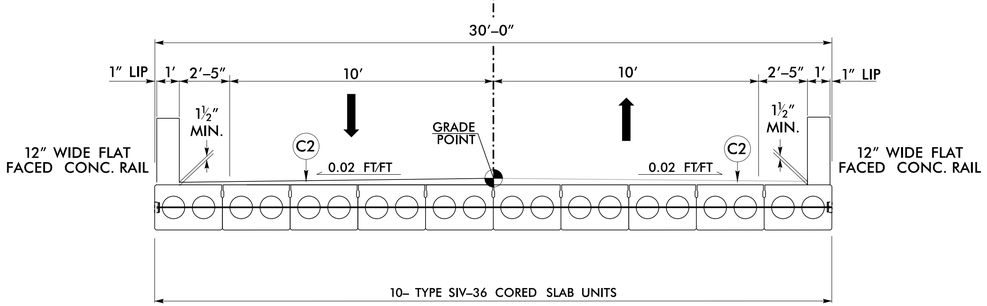


TYPICAL SECTION NO. 3

## USE TYPICAL SECTION NO. 3

–L1– STA. 15+23.75 (BEGIN BRIDGE) TO
–L1– STA. 16+66.25 (END BRIDGE)

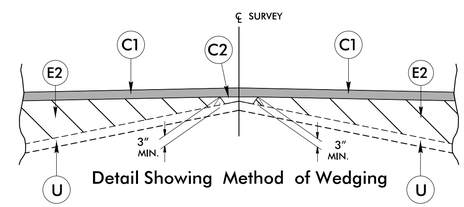


Detail Showing Method of Wedging

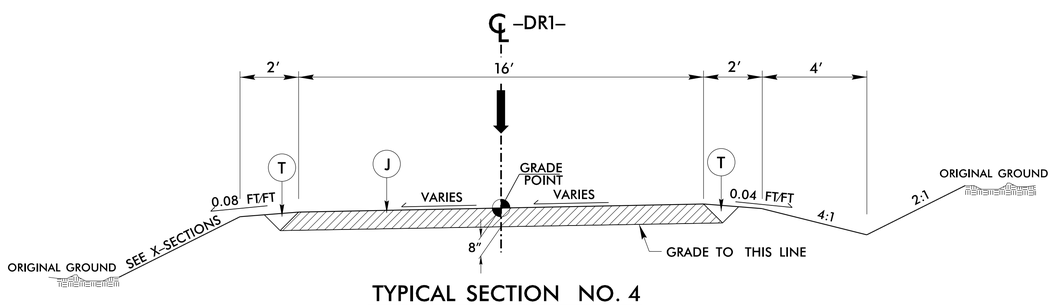


TYPICAL SECTION NO. 4

## USE TYPICAL SECTION NO. 4

–DR1– STA. 10+26.39 TO –DR1– STA. 11+24.90

| | PAVEMENT SCHEDULE |
|---|---|
| C1 | PROP. APPROX. 3″ ASPHALT CONCRETE SURFACE COURSE, TYPE S9.5B, AT AN AVERAGE RATE OF 168 LBS. PER SQ. YD. IN EACH OF TWO LAYERS. |
| C2 | PROP. VAR. DEPTH ASPHALT CONCRETE SURFACE COURSE, TYPE S9.5B AT AN AVERAGE RATE OF 112 LBS. PER SQ. YD. PER 1″ DEPTH. TO BE PLACED IN LAYERS NOT TO EXCEED 1½″ IN DEPTH. |
| E1 | PROP. APPROX. 4″ ASPHALT CONCRETE BASE COURSE, TYPE B25.0C, AT AN AVERAGE RATE OF 456 LBS. PER SQ. YD. |
| E2 | PROP. VAR. DEPTH ASPHALT CONCRETE BASE COURSE, TYPE B25.0C, AT AN AVERAGE RATE OF 114 LBS. PER SQ. YD. PER 1″ DEPTH. TO BE PLACED IN LAYERS NOT LESS THAN 3″ IN DEPTH OR GREATER THAN 5½″ IN DEPTH. |
| J | PROP. 8″ AGGREGATE BASE COURSE |
| R | SHOULDER BERM GUTTER (SEE NCDOT STANDARD DRAWING NO. 846.01) |
| T | EARTH MATERIAL |
| U | EXISTING PAVEMENT |
| W | PROPOSED WEDGING (SEE APPROPRIATE DETAILS) |

NOTE: PAVEMENT EDGE SLOPES ARE 1:1 UNLESS SHOWN OTHERWISE

5/14/99
8/20/2019 11:33:05 AM
pw:\\pwdenver.bentley.com:PWDENVER\Projects\14SP.2088I.1\PLAN\14SP.2088I.1_rdy_typ.dgn
USER:mlittlejohn
PLOT SCALE:1:20 PLOT DATE:8/20/2019